SOUTH SUDAN CLEAN AIR INITIATIVE · PROJECT LAUNCH

Technical Overview of Air Quality Monitor



Our Bino Sensor deployment: PM10, PM2.5, & PM1.0 measurement, installation and operations

Funded by the University of Chicago

HADO

THE UNIVERSITY OF CHICAGO EPIC ENERGY POLICY INSTITUTE | Air Quality Fund

MINISTRY OF ENVIRONMENT & FORESTRY · Environment is Life · REPUBLIC OF SOUTH SUDAN

Ministry of Health

Agenda

1. How the Bino Sensor measures PM2.5
2. How we are going to install the 20 Sensors
3. How we run the network and read the data

The Bino Sensor

There are already 350+ Sensors installed in 8 African cities.

Built for Africa

AirQo designed and calibrated it for African cities.

Ready for dust

It copes with extreme weather, dust and heat.

Solar Powering

We power it where public electricity is unreliable.

2G GSM data

An IoT SIM card sends our data, even with weak internet.

Where Bino Sensor Adopted >>



We measure by particle size

PM1.0: the tiniest particles. They reach deepest into the lungs.

PM2.5: our main measure. We report fine particles of 2.5 µm or smaller.

PM10: thicker dust. It matters in the dry season, when dust rises.

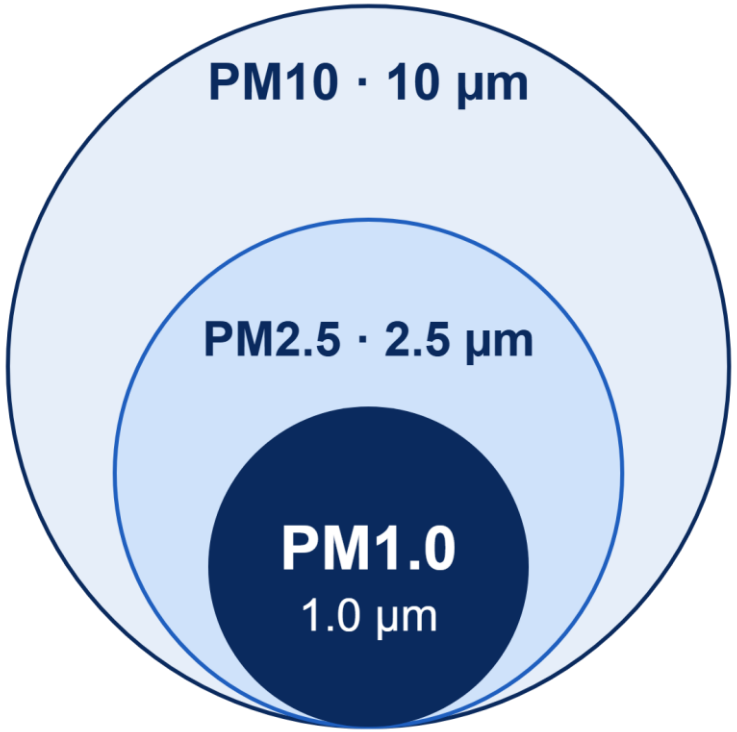

Sources of pollutants we expect

Likely source of PM2.5	Juba	Terekeka	Magwi
Traffic and road dust	●	○	○
Generators	●	○	—
Cooking with wood and charcoal	●	●	●
Burning of waste	●	○	○
Bush and farm burning	○	○	●
Cattle-camp fires	—	●	—

These are our expectations. The Sensors will show us what is true.

How the Bino Sensor measures PM2.5

1 Draw air in

A small fan pulls outdoor air into the sensor.

2 Shine a laser

A laser beam lights up the particles in the air.

3 Detect the light

Each particle scatters light. A detector picks it up.

4 Sort by size

The sensor sorts the light signals into PM1.0 and PM2.5 and PM10 .

5 Convert the count

The sensor turns the counts into µg/m³ of air.

6 Send the data

We receive the readings on our data platform.

How we keep the data accurate

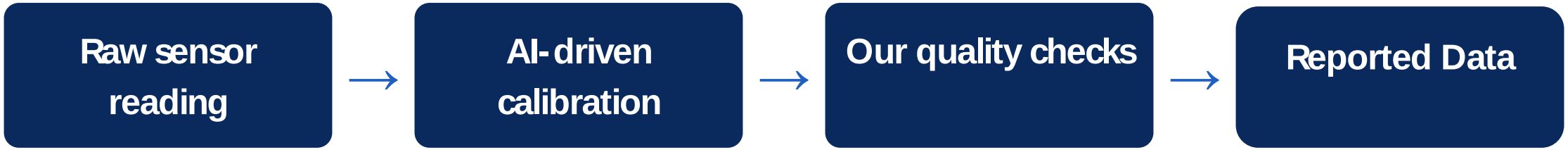

- AirQo applies AI-driven calibration to improve accuracy.
- We compare our sensors with a reference Sensor.
- We flag missing or odd values before we report them.
- Our data shows patterns and hotspots. It supports official Sensors.

Before we install: we choose the site

Pick open air

We choose a spot at breathing height(6 meters at least), away from walls and trees that block air.

Avoid local smoke

We stay clear of chimneys, burning areas and generator exhausts.

Agree the site

We agree the location with the owner, for example a school, health centers or police station.

Check power and signal

We confirm steady power (solar) and a mobile signal.

How we install a Bino Sensors

1 Unpack and inspect

We check the sensor, bracket, cables and solar panels

2 Label the unit

We write the Sensor ID and site name on the unit before deployment.

3 Mount it

We fix the bracket firmly and keep the air inlet clear.

4 Connect power

We connect mains or solar power and switch it on.

5 Connect to the network

We link the Sensor to mobile data and wait for the first reading.

Power and data connection

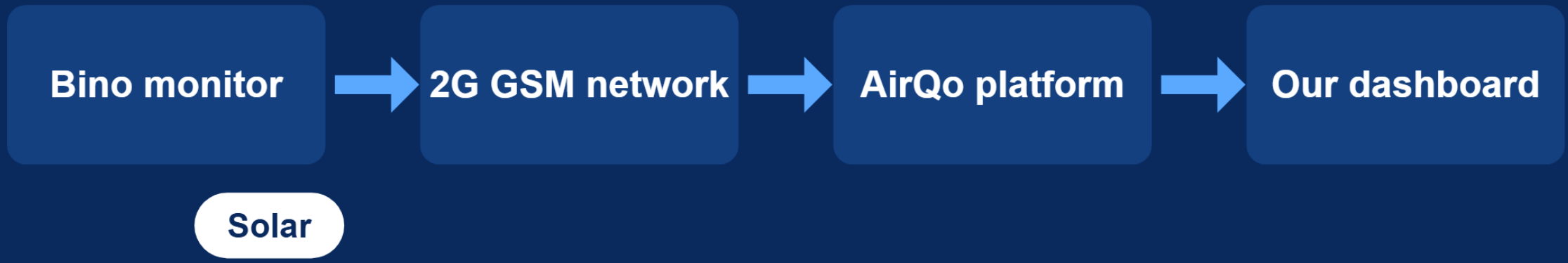

- We power each Sensor with solar electricity.
- We rely on 2G SIM cards, so data flows where internet is weak.
- If data stops, we check power and signal first.

After installation: we test and record

✓ We confirm readings

We check that PM2.5 values arrive on the platform.

✓ We record the site

We note the GPS location and take a photo of the Sensor.

✓ We compare readings

We compare the sensor with a reference Sensor.

✓ We brief a local contact

We show one local person how to spot a problem and who to call.

How we read the numbers

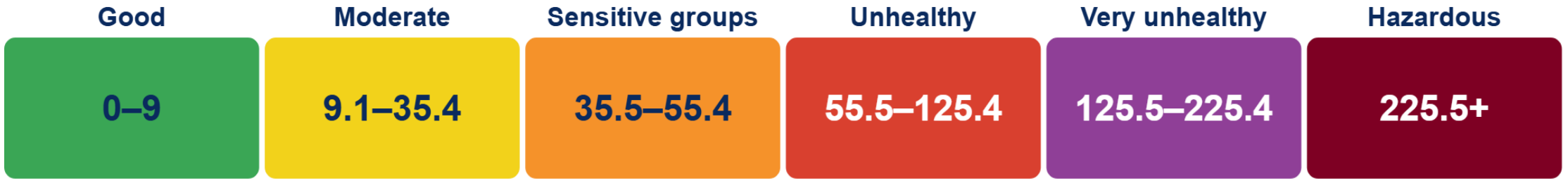

- We compare our readings with the WHO guideline: 15 µg/m³ over 24 hours.
- We use the colours to tell people quickly if the air is safe.

Running the network

Every day: we handle data

1. Our Sensors send readings
2. We check for missing or odd values
3. We store clean data safely
4. We share results in simple charts

Regularly: we care for Sensors

- We clean the air inlet
- We check power and signal
- We compare with a reference Sensor
- We repair or replace faulty parts

Our operations schedule

Daily

- We confirm every Sensor sends data.
- We spot gaps and odd readings.

Weekly

- We review data quality.
- We log faults and call the field team.

Every 3 months

- We visit sites and clean the air inlet.
- We check power, SIM and mounting
- We compare each sensor with a reference Sensor.
- We replace worn parts.

This is our proposed schedule. We adjust it as we learn from the field.

Pictures of the Bino Sensors





Do's

- Install the monitor where air can flow freely around it.
- Place the monitor at least 4 meters above the ground.
- Install the monitor vertically with the vents facing downwards.

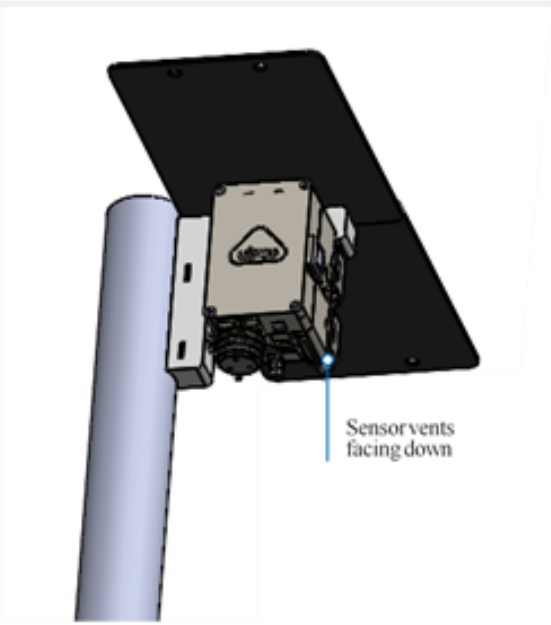

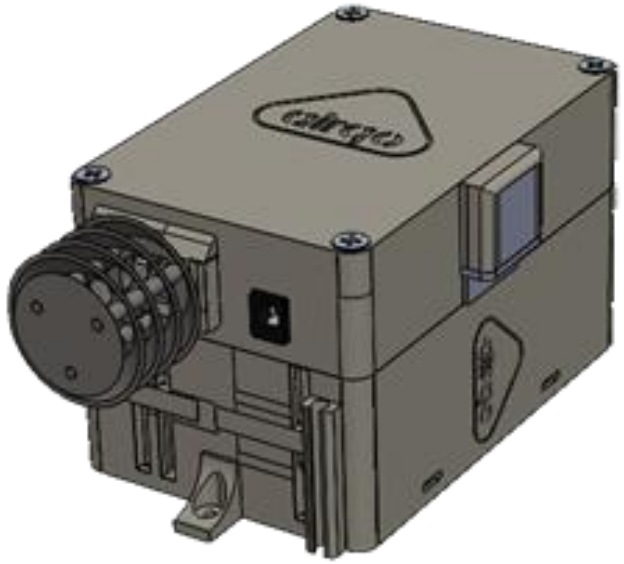

- 1 Binos Air Monitor

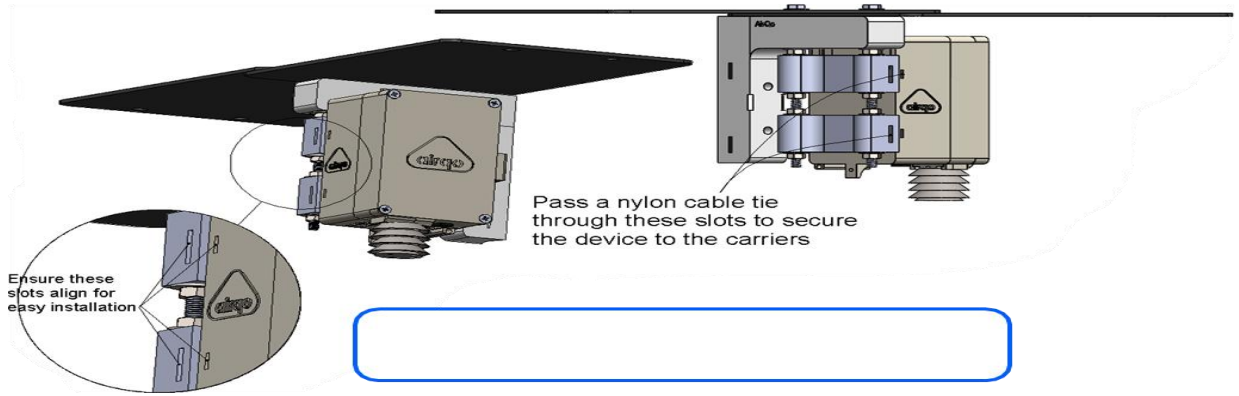
Pass a nylon cable tie
through these slots to secure
the device to the carriers
Ensure these
slots align for
easy installation

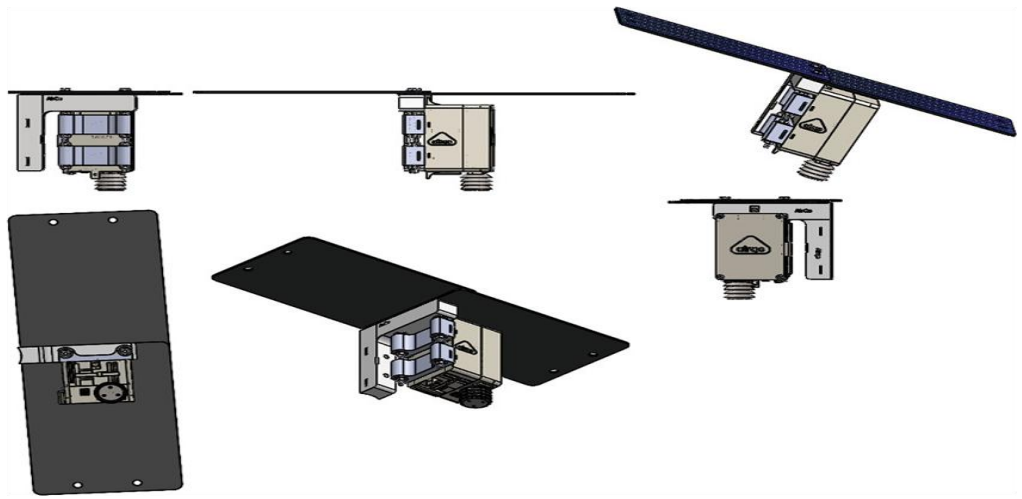

Air Quality Measurements

Particulate matter	Range of measurement 0.3~1.0;1.0~2.5; 2.5~10 in Micrometer(μm)
Effective range for $PM_{2.5}$	0~500μg/m^3
Maximum range for $PM_{2.5}$	<1000μg/m^3
Maximum consistency for $PM_{2.5}$	±10%@100~500μg/m^3 | ±10μg/m^3@0~100μg/m^3
Standard volume/flow	0.1l
Single response time	<1s
Data resolution	60-90 seconds

Data accessibility

Technology and frequency	Quad-band GSM/GPRS. 2G. Frequencies: GSM 850MHz, EGSM 900MHz, DCS 1800MHz and PCS 1900MHz
Data accessibility	HADO Website (www.hado.org.ss)

Key points

- PM is tiny but harmful to health
- We install 20 Bino sensors: 10 in Juba, 5 in Terekeka, 5 in Magwi
- Each area has its own pollution sources
- We care for each sensor so our data stays trustworthy